Лекция 4

19 февраля

```
void f() {
   int a[16];
   int i, x = 99, y = 97;          // 1
   if (x < y) {                    // 2
      a[0] = 0;                    // 3
      for (i = 1; i < 16; ++i) { // 4
         a[i] = y / i;             // 5
      }
   }
}
```

```
section .text
global f
f:
    push    ebp
    mov     ebp, esp
    sub     esp, 88
    mov     DWORD [ebp-8], 99          ; (1)
    mov     DWORD [ebp-4], 97          ; (2)
    mov     eax, DWORD [ebp-8]         ; (3)
    sub     eax, DWORD [ebp-4]         ; (4)
    jge     L5                         ; (5)
    mov     DWORD [ebp-76], 0          ; (6)
    mov     DWORD [ebp-12], 1          ; (7)
L3:
    cmp     DWORD [ebp-12], 15         ; (8)
    jg      L5                         ; (9)
    mov     ecx, DWORD [ebp-12]        ; (10)
    mov     edx, DWORD [ebp-4]         ; (11)
    mov     eax, edx                   ; (12)
    sar     edx, 31                    ; (13)
    idiv    ecx                        ; (14)
    mov     DWORD [ebp-76+ecx*4], eax  ; (15)
    add     DWORD [ebp-12], 1          ; (16)
    jmp     L3                         ; (17)
L5:
    leave
    ret
```

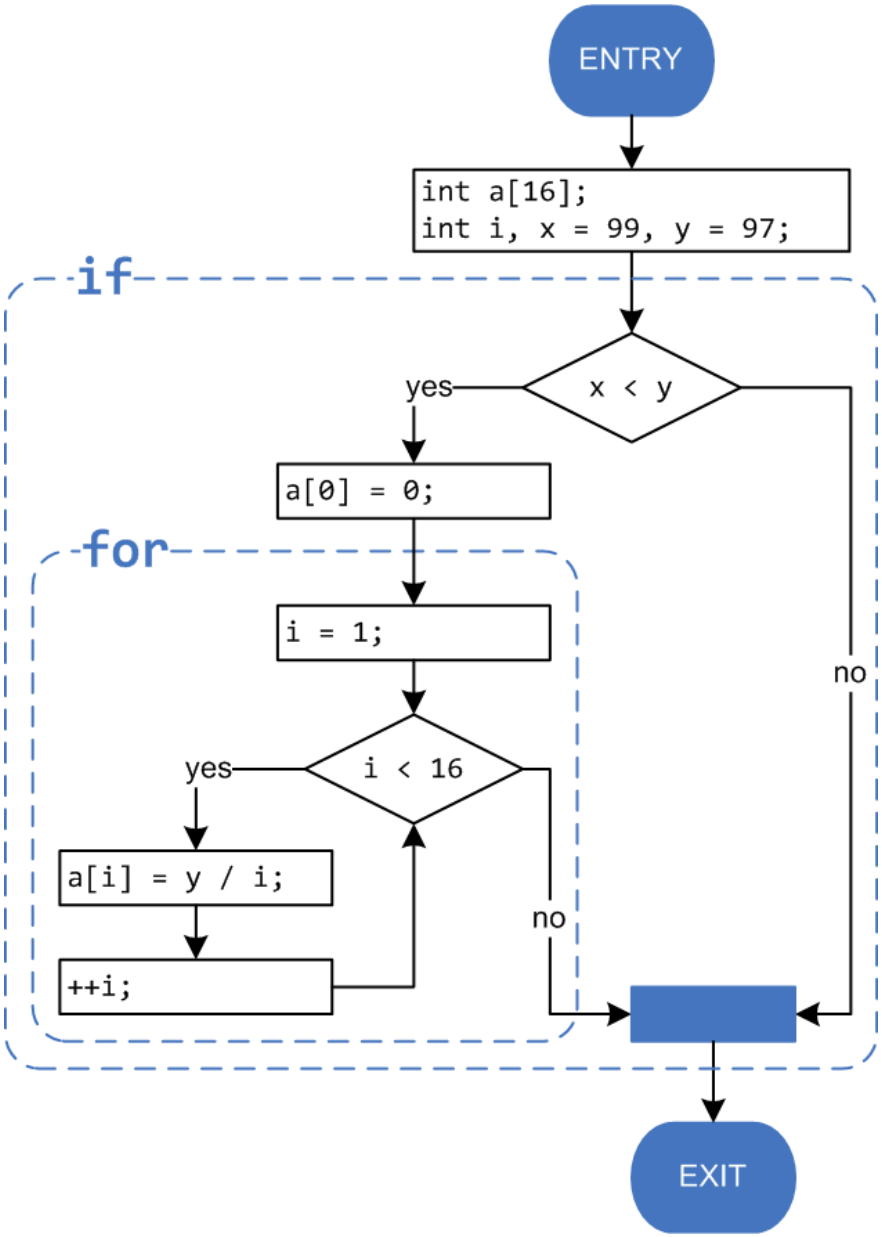

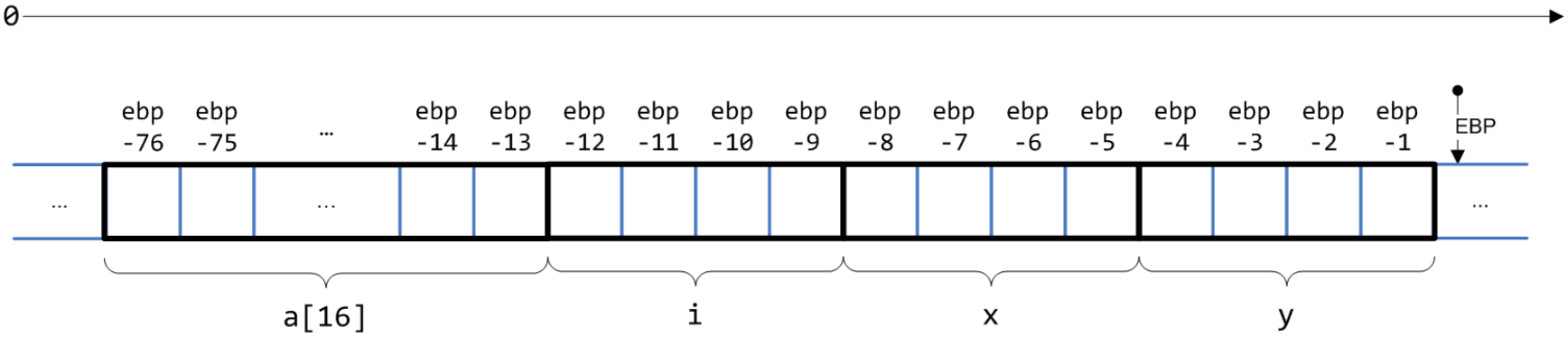

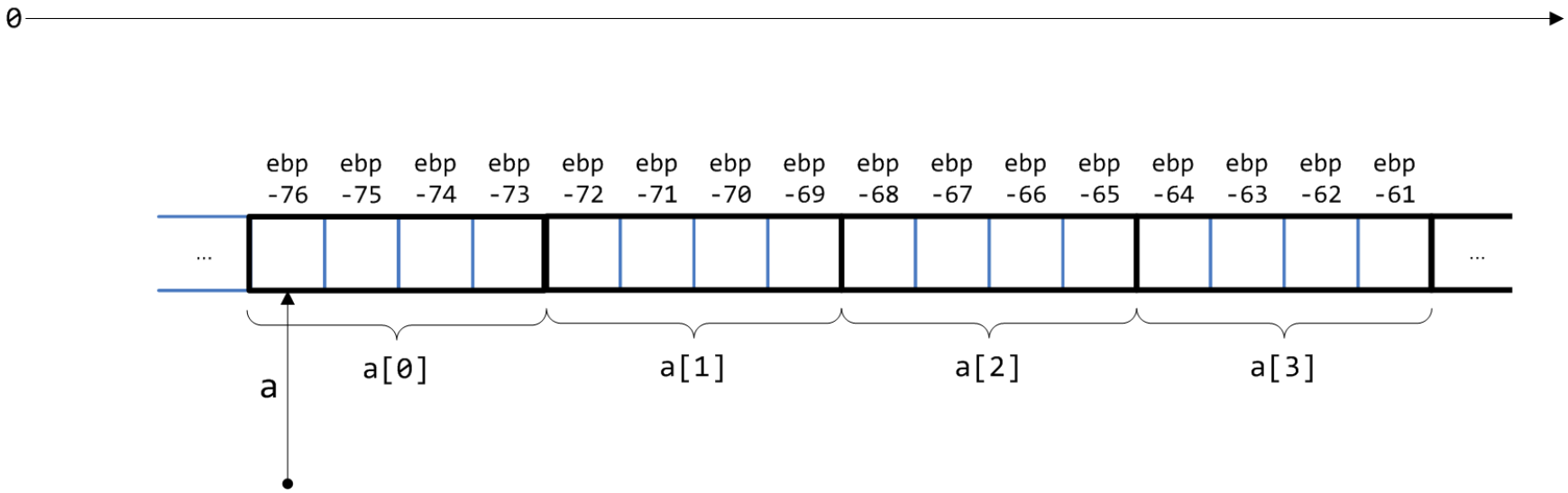

```
        mov     DWORD [ebp-8], 99          ; (1)
        mov     DWORD [ebp-4], 97          ; (2)
        mov     eax, DWORD [ebp-8]         ; (3)
        sub     eax, DWORD [ebp-4]         ; (4)
        jge     L5                         ; (5)
        mov     DWORD [ebp-76], 0          ; (6)
        mov     DWORD [ebp-12], 1          ; (7)
L3:
        cmp     DWORD [ebp-12], 15         ; (8)
        jg      L5                         ; (9)
        mov     ecx, DWORD [ebp-12]        ; (10)
        mov     edx, DWORD [ebp-4]         ; (11)
        mov     eax, edx                   ; (12)
        sar     edx, 31                    ; (13)
        idiv    ecx                        ; (14)
        mov     DWORD [ebp-76+ecx*4], eax  ; (15)
        add     DWORD [ebp-12], 1          ; (16)
        jmp     L3                         ; (17)
L5:
        …
```

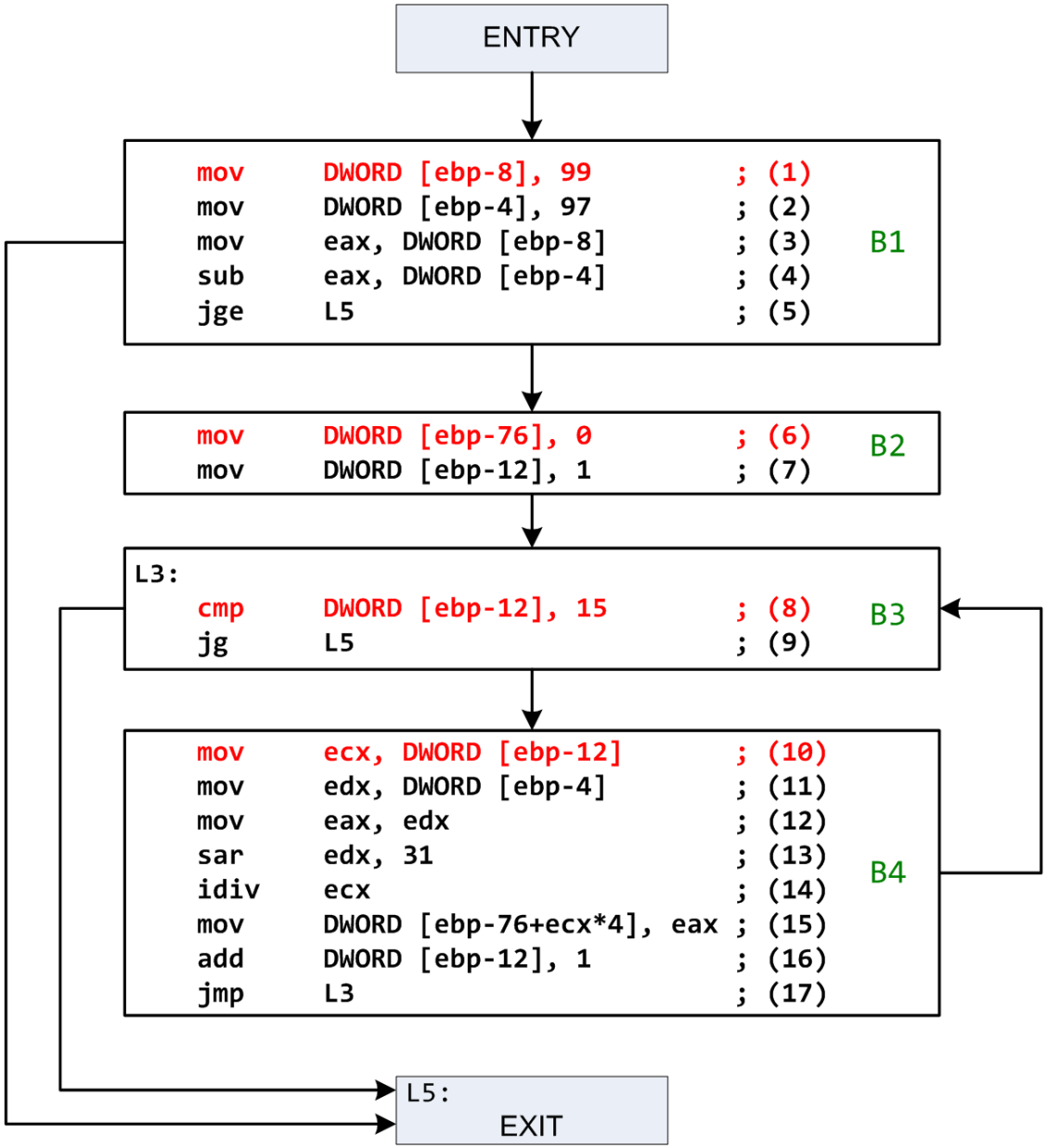

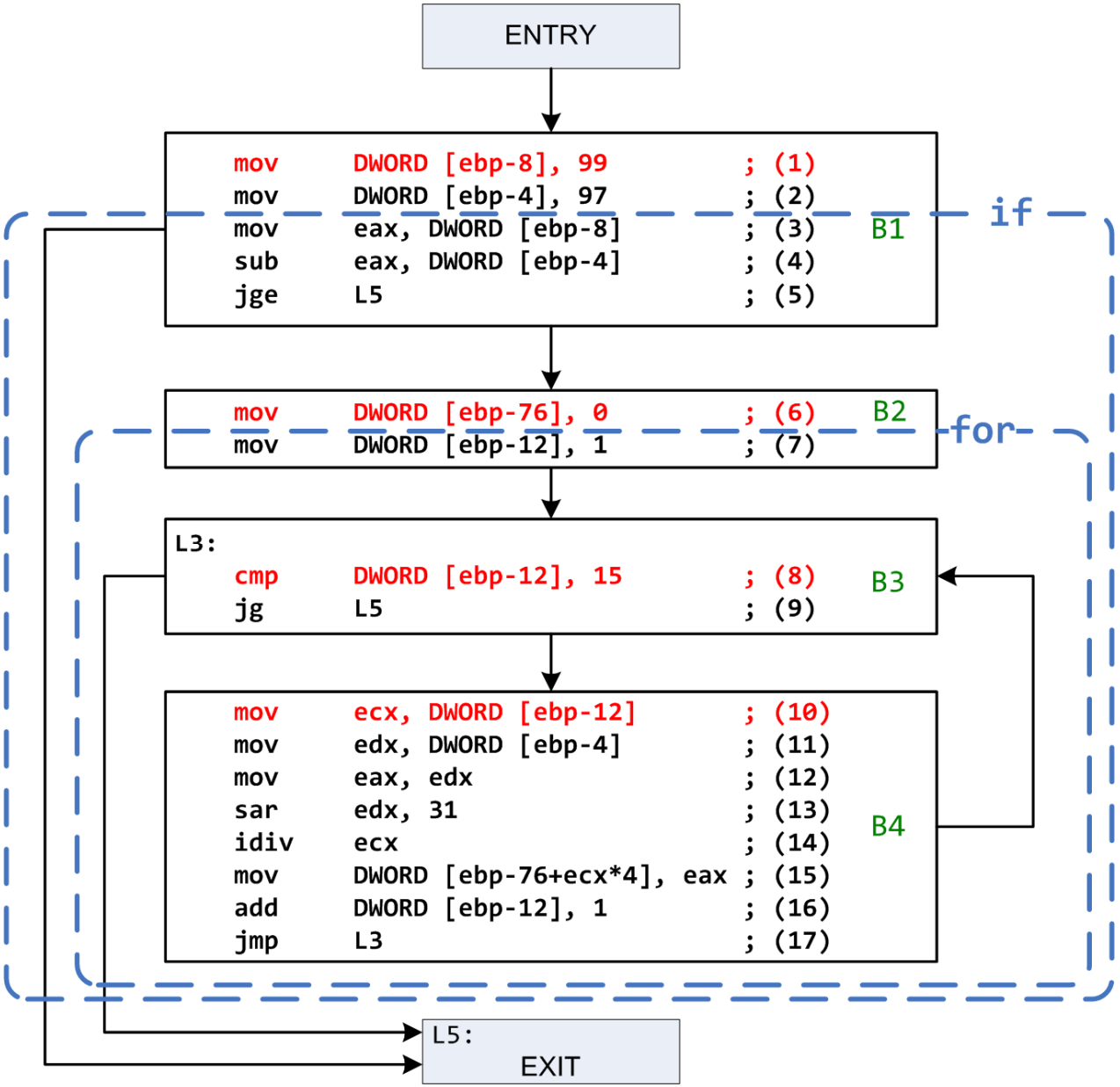

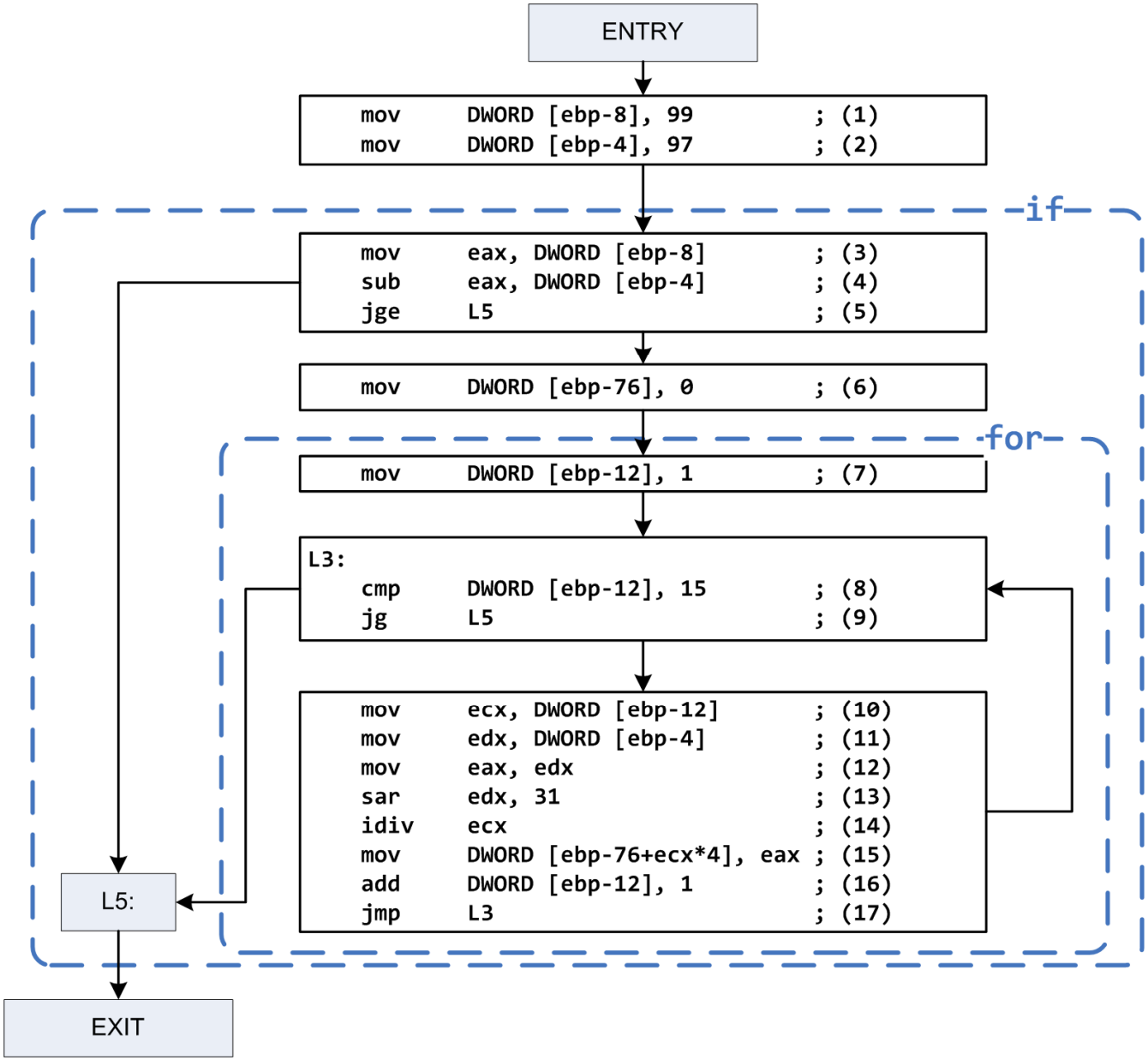

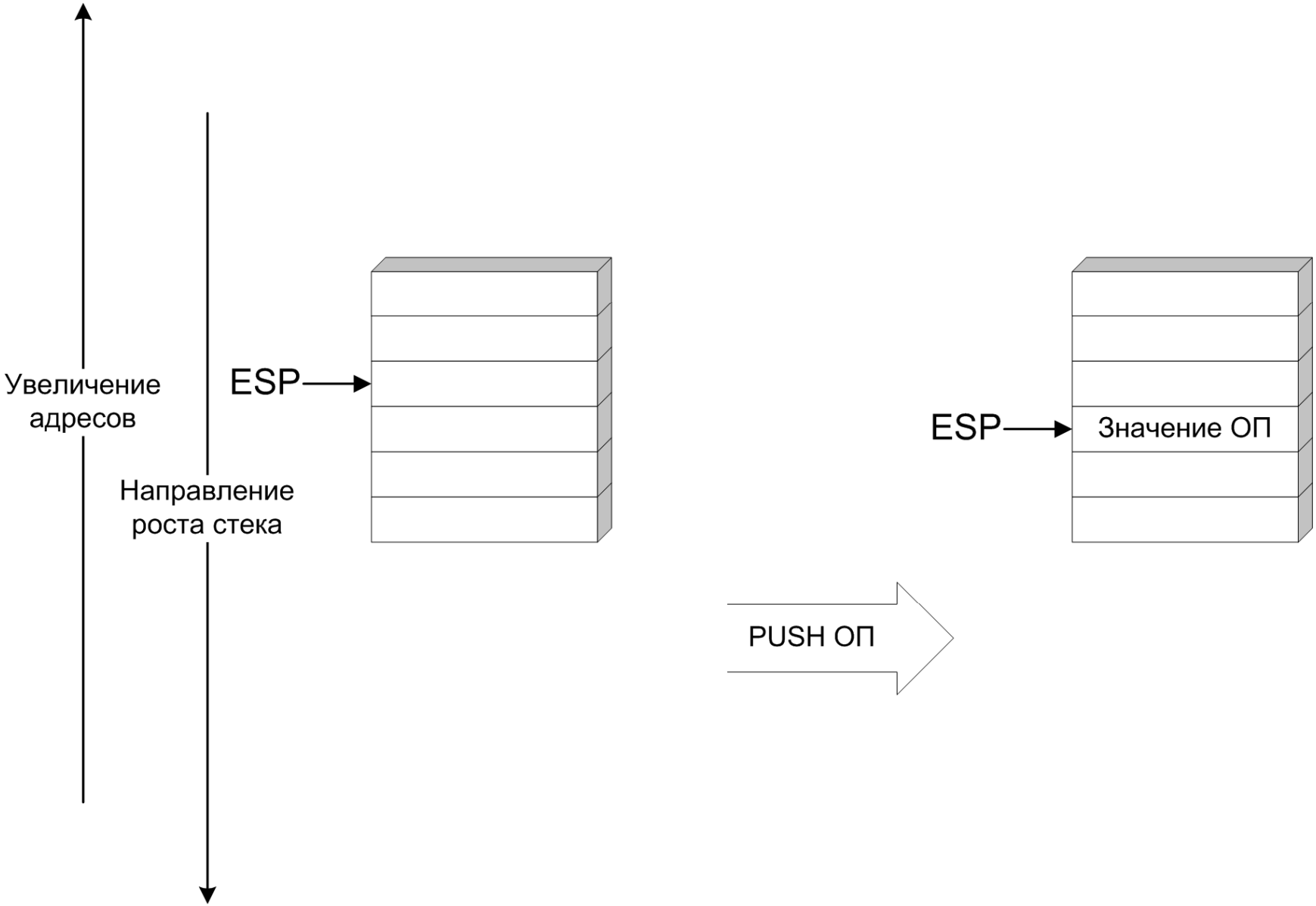

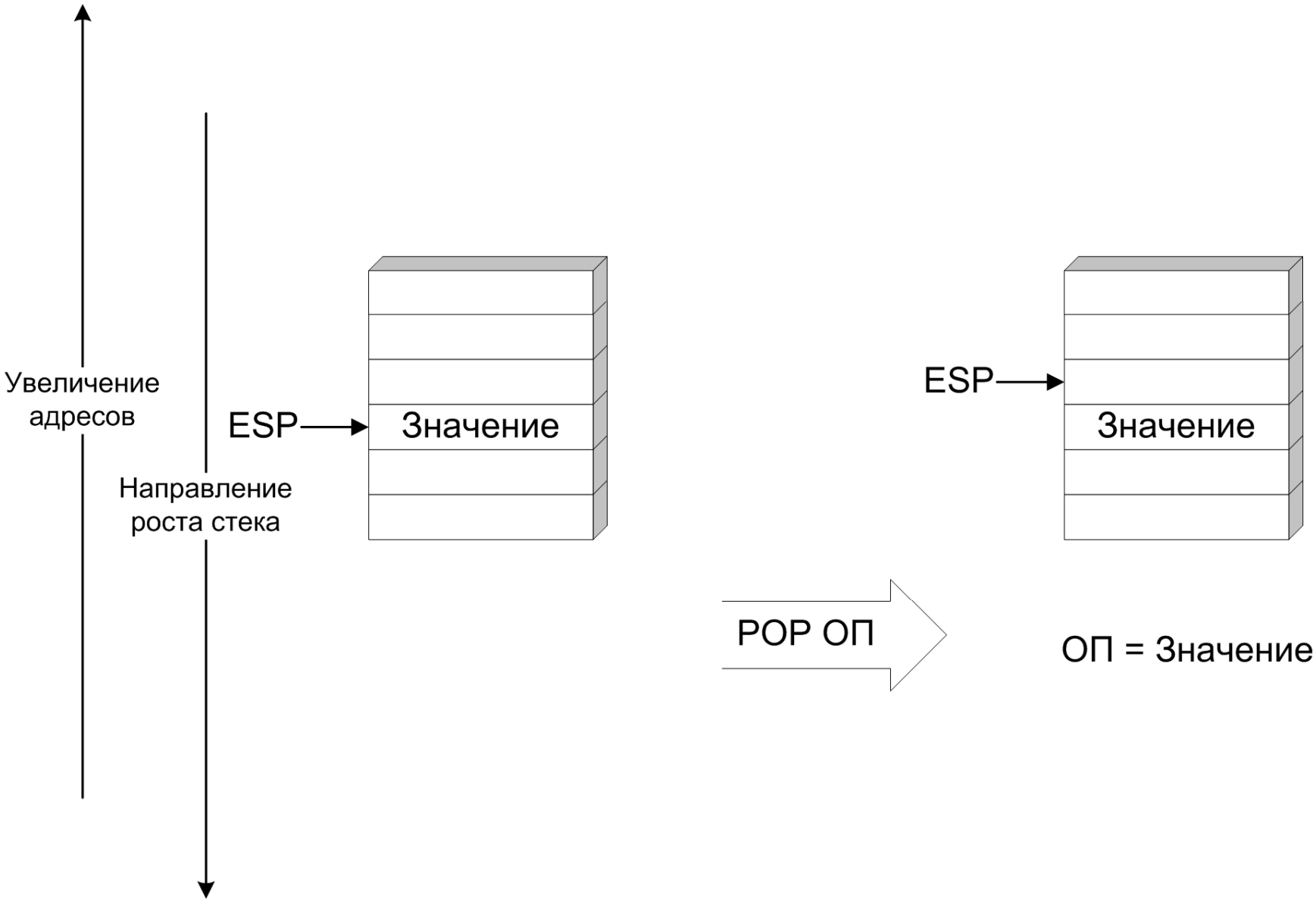

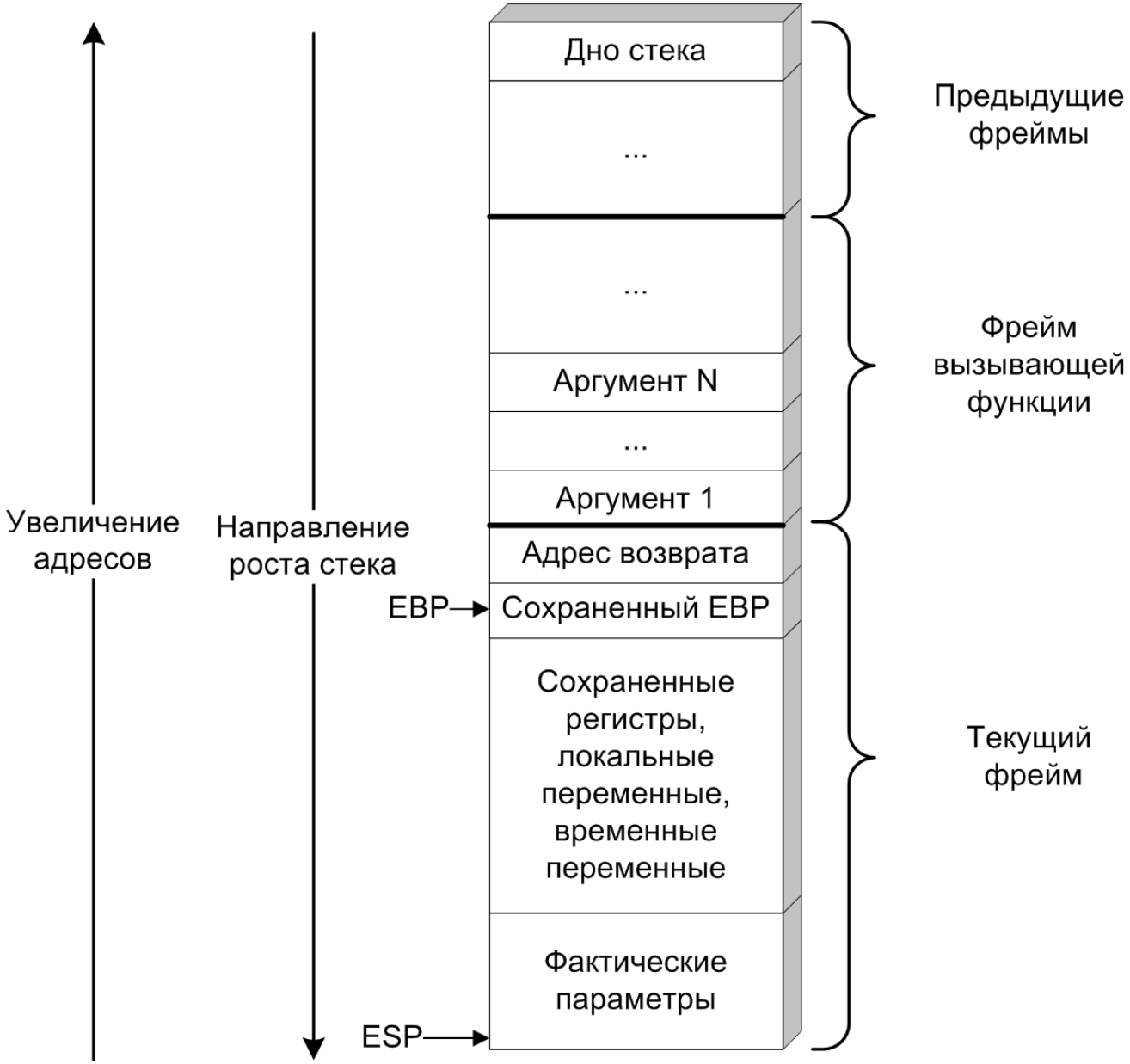

```c
int main() {
   int a = 1, b = 2, c;
   c = sum(a, b);
   return 0;
}

int sum(int x, int y) {
   int t = x + y;
   return t;
}
```

```
%include 'io.inc'
section .text

global CMAIN
CMAIN:
mov    DWORD [ebp-16],0x1  ; (1)
mov    DWORD [ebp-12],0x2  ; (2)
mov    eax,DWORD [ebp-12]  ; (3)
mov    DWORD [esp+4],eax   ; (4)
mov    eax,DWORD [ebp-16]  ; (5)
mov    DWORD [esp],eax     ; (6)
call   sum                 ; (7)
mov    DWORD [ebp-8],eax   ; (8)

global sum
sum:
push   ebp                 ; (9)
mov    ebp,esp             ; (10)
sub    esp,0x10            ; (11)
mov    edx,DWORD [ebp+12]  ; (12)
mov    eax,DWORD [ebp+8]   ; (13)
add    eax,edx             ; (14)
mov    DWORD [ebp-4],eax   ; (15)
mov    eax,DWORD [ebp-4]   ; (16)
mov    esp, ebp            ; (17)
pop    ebp                 ; (18)
ret                        ; (19)
```